ITEM	QTY	DESCRIPTION
12	2	M8x16 SHCS
11	1	CAPTIVE SPACER - CUSH DRIVE
10	1	CAPTIVE SPACER - SPROCKET SIDE
9	1	CAPTIVE SPACER-DISC SIDE
8	1	SLIDER - DISC SIDE
7	1	SLIDER - SPROCKET SIDE
6	1	FRAME - CHAIN SIDE
5	1	FRAME - DISC SIDE
4	1	LOCATION PLATE
3	2	M8 FLANGED NUT
2	2	SLIDE SPINDLE
1	1	CALIPER MOUNT

Parts List

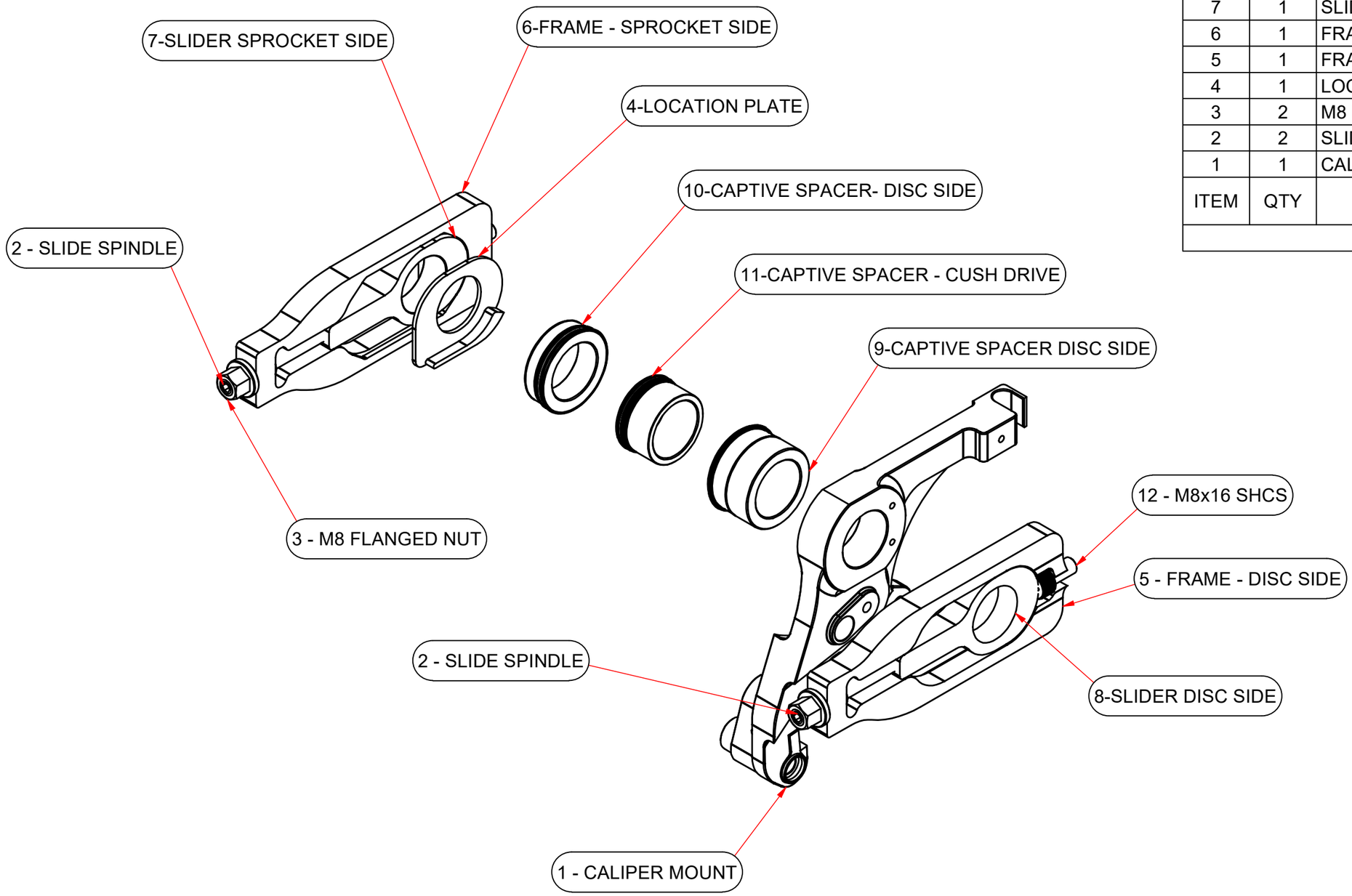

ISS.	DATE	DESCRIPTION	DRAWN

TOLERANCES UNLESS OTHERWISE SPECIFIED
XXmm +/- 0.3
XX.Xmm +/- 0.1
XX.XXmm +/- 0.01
ANGULAR TOL.+/- 0.5

DO NOT SCALE

A3

Nordon PTY LTD.
Block Ice Makers
Motorcycle Components
CNC Machining
Product Design & Manufacture
3D Solid Modeling
Mobile: +61 (0)414 827 791
Phone: +61 (0)8 8277 9191
Fax: +61 (0)8 8374 1766

NUMBER REQUIRED

SURFACE TREATMENT

HEAT TREATMENT

MATERIAL

MOTIONLOGICS

CHECKED

DRAWN: NORDON PTY LTD

© COPYRIGHT

SHEET: 1 OF 1

APPROVED DATE

DATE: 6/03/2024

PART NAME: YAMAHA 2022 R1 UNDER SLUNG CALIPER

ISSUE: 1

SCALE

DRAWING NUMBER: R1 2022 UNDER SLUNG CALIPER MOUNT